The Mathematical Association of Victoria

STUDENT NAME_____

Specialist Mathematics
Trial Examination 2
Question and Answer Book

VCE Examination

- Reading time is **15 minutes**
- Writing time is **2 hours**

Approved materials
- Protractors, set squares and aids for curve sketching
- One bound reference
- One approved CAS calculator or CAS software, and one scientific calculator

Materials supplied
- Question and Answer Book of 24 pages
- Formula Sheet
- Multiple-Choice Answer Sheet

Instructions
- Follow the instructions on your Multiple-Choice Answer Sheet
- At the end of the examination, place your Multiple-Choice Answer Sheet inside the front cover of this book

Students are not permitted to bring mobile phones and/or any unauthorised electronic devices into the examination room.

Contents pages

Section A (20 questions, 20 marks)..... 3-9
Section B (5 questions, 60 marks).....11-23

© The Mathematical Association of Victoria, 2025

THIS PAGE IS BLANK

© The Mathematical Association of Victoria, 2025

Section A – Multiple-choice questions

Instructions

- Answer **all** questions in pencil on your Multiple-Choice Answer Sheet.
- Choose the response that is **correct** for the question.
- A correct answer scores 1; an incorrect answer scores 0.
- Marks will **not** be deducted for incorrect answers.
- No marks will be given if more than one answer is completed for any question.
- Unless otherwise indicated, the diagrams in this book are **not** drawn to scale.
- Take the **acceleration due to gravity** to have magnitude g m s^{-2}, where $g = 9.8$

Question 1

Consider the following statement.

'For all integers, if $n^2 - 2n + 7$ is even, then n is even.'

Which of the following is the contrapositive of this statement?

A. There exists an integer such that n is even and $n^2 - 2n + 7$ is odd.

B. For all integers, if n is odd, then $n^2 - 2n + 7$ is odd.

C. For all integers, if $n^2 - 2n + 7$ is even, then n is odd.

D. There exists an integer such that n is odd and $n^2 - 2n + 7$ is even.

Question 2

For the curve $f(x) = \dfrac{ax^2 + 4a}{x - 2}$, where $a \in R \setminus \{0\}$, the graph has asymptotes at

A. $x = a$ only

B. $x = 2$ and $y = 0$

C. $x = a$ and $y = ax + 2a$

D. $x = 2$ and $y = ax + 2a$

Question 3

The graph of $y = -\sec(n\pi x + \pi)$ where $n \in Q \setminus \{0\}$, will have its first positive local maximum point at

A. $x = n$

B. $x = 2n$

C. $x = \dfrac{n}{2}$

D. $x = \dfrac{1}{n}$

Question 4

Given that $f(x) = \sec(\pi x) - 1$ and $g(x) = 2\cos(\pi x)$. The area enclosed between the graphs of $y = f(x)$ and $y = g(x)$ in the interval $x \in (-1, 1)$ is rotated about the x-axis.

The volume (in cubic units) of the solid of revolution is closest to

A. 5.63

B. 3.14

C. 2.92

D. 0.83

© The Mathematical Association of Victoria, 2025

Question 5

The length of the curve specified by $x = \sin(t) + 1$ and $y = 2t + \cos(t)$, where $t \in [0, \pi]$, is given by

A. $\int_0^{\pi} (\cos(t) + \sin(t) + 2)\,dt$

B. $\int_0^{\pi} \sqrt{(\sin(t)+1)^2 + (2t + \cos(t))^2}\,dt$

C. $\int_0^{\pi} \sqrt{(5 - 4\sin(t))}\,dt$

D. $\int_0^{\pi} (5 - 4\sin(t))\,dt$

Question 6

Given the complex number $z = x + yi$, where $x, y \in R$ and $z \in C$, a relation that forms the Cartesian graph $(x-2)^2 + (y+2)^2 \le 16$ is

A. $|z - 2i| \le 4$

B. $|z + 2 - 2i| \le 16$

C. $(z-2)(\bar{z}+2) = 16$

D. $|z - 2 + 2i| \le 4$

Question 7

The position of a particle moving in the Cartesian plane, at time t, is given by the parametric equations

$$x(t) = \cos^2(t) + 1 \text{ and } y(t) = \tan^2(t) \text{ where } t \ge 0.$$

The gradient of the line tangential to the path of the particle at $t = \frac{\pi}{4}$ is

A. -4

B. $\sqrt{2}$

C. $\dfrac{-\tan(t)\sec^2(t)}{\sin(2t)}$

D. $\dfrac{-1}{\left(\frac{\pi}{4} - 1\right)^2}$

© The Mathematical Association of Victoria, 2025

Question 8

The definite integral $\int_0^2 \left((2x+1)^2 \sqrt{1+4x} \right) dx$ can be evaluated using

A. $\frac{1}{4}\int_0^2 \left(u^{\frac{1}{2}} \left(u^2 + 2u + 1 \right) \right) du$

B. $\frac{1}{16}\int_1^9 \left(u^{\frac{5}{2}} + 2u^{\frac{3}{2}} + u^{\frac{1}{2}} \right) du$

C. $\frac{1}{16}\int_0^2 \left(u^{\frac{5}{2}} + 2u^{\frac{3}{2}} + u^{\frac{1}{2}} \right) du$

D. $\frac{1}{4}\int_1^9 \left(u^{\frac{1}{2}} \left(u^2 + 2u + 1 \right) \right) du$

Question 9

The acceleration, a ms^{-2}, of a particle moving in a straight line, starting with an initial velocity of 1 ms^{-1} at 1 metre in the positive direction of its displacement, is described by $a = x + x^2$, where v ms^{-1} is its velocity after x metres. The velocity of the particle, in ms^{-1}, when the displacement is 10 metres could equal

A. 27.7

B. 59.5

C. $\sqrt{766}$

D. $\frac{10\sqrt{69}}{3}$

Question 10

Which of the following differential equations will have the slope field that is defined only in the first and third quadrants?

A. $\frac{dy}{dx} = \log_e \left(\frac{x}{10y} \right)$

B. $\frac{dy}{dx} = \log_e |xy|$

C. $\frac{dy}{dx} = e^{xy}$

D. $\frac{dy}{dx} = \frac{y}{x^2}$

© The Mathematical Association of Victoria, 2025

Question 11

Euler's method of solving differential equations, with a step size of h, is used to approximate the solution of the equation $(x^2+1)\frac{dy}{dx}-y+1=0$.

Given that $y_0=2$ when $x_0=0$, which of the following expresses the value of y_2?

A. $2+2h$

B. $2+h\times\frac{1}{h^2+1}$

C. $2+h\times\frac{h+1}{h^2+1}$

D. $2+h+h\times\frac{h+1}{h^2+1}$

Question 12

Consider three vectors $\underset{\sim}{a}=3\underset{\sim}{i}+4n\underset{\sim}{j}+\underset{\sim}{k}$, $\underset{\sim}{b}=-\underset{\sim}{i}-2\underset{\sim}{j}+2n\underset{\sim}{k}$ and $\underset{\sim}{c}=2\underset{\sim}{i}+\underset{\sim}{k}$. Given that $\underset{\sim}{a}$ can be expressed as $\underset{\sim}{a}=p\underset{\sim}{b}+q\underset{\sim}{c}$ where $n,p,q\in R$, these three vectors are **linearly independent** when

A. $\left\{n=-\frac{1}{2},p=1,q=2\right\}\cup\left\{n=\frac{1}{4},p=-\frac{1}{2},q=\frac{5}{4}\right\}$

B. $\left\{n=-\frac{1}{2},p=1,q=2\right\}$ only

C. $n\in R\setminus\left\{-\frac{1}{2},\frac{1}{4}\right\},p\in R\setminus\left\{1,-\frac{1}{2}\right\},q\in R\setminus\left\{2,\frac{5}{4}\right\}$

D. $n\in R\setminus\left\{-\frac{1}{2}\right\},p\in R\setminus\{1\},q\in R\setminus\{2\}$

Question 13

$OABC$ is a parallelogram with sides $\overrightarrow{OA}=-\underset{\sim}{i}+2\underset{\sim}{j}+\underset{\sim}{k}$ and $\overrightarrow{OC}=2\underset{\sim}{i}-\underset{\sim}{j}-2\underset{\sim}{k}$. The area of triangle ABC is

A. $\sqrt{34}$

B. $\frac{3\sqrt{2}}{2}$

C. $3\sqrt{2}$

D. $\sqrt{59}$

© The Mathematical Association of Victoria, 2025

Question 14

Consider the vectors given by $\underset{\sim}{a} = m\underset{\sim}{i} - 2\underset{\sim}{j}$ and $\underset{\sim}{b} = 2\underset{\sim}{i} - m\underset{\sim}{j}$, where m is a real constant. If the obtuse angle between vectors $\underset{\sim}{a}$ and $\underset{\sim}{b}$ is 150^0, then m equals

A. $4-\sqrt{3}, 4+\sqrt{3}$

B. $\sqrt{3}, \frac{1}{\sqrt{3}}$

C. $2\sqrt{3}, \frac{2\sqrt{3}}{3}$

D. $-2\sqrt{3}, -\frac{2\sqrt{3}}{3}$

Question 15

The Cartesian equation of a straight line is given by

$$\frac{x-1}{2} = y+1 = \frac{-z+2}{2}$$

The shortest distance from the point $(3,-2,0)$ to the line is

A. $4\sqrt{2}$

B. $4\sqrt{5}$

C. $\frac{4\sqrt{2}}{3}$

D. $\frac{3\sqrt{5}}{2}$

Question 16

Consider three vectors given by $\underset{\sim}{a} = m\underset{\sim}{i} + \underset{\sim}{j} + 2\underset{\sim}{k}$, $\underset{\sim}{b} = 2\underset{\sim}{i} + \underset{\sim}{j} - m\underset{\sim}{k}$ and $\underset{\sim}{c} = -3\underset{\sim}{i} - \underset{\sim}{j} + \underset{\sim}{k}$, where $m \in R$. If vectors $\underset{\sim}{a}$, $\underset{\sim}{b}$ and $\underset{\sim}{c}$ lie on the same plane, then m equals

A. $0, 4$

B. $-1 \pm \sqrt{5}$

C. $1 \pm \sqrt{5}$

D. 2 only

© The Mathematical Association of Victoria, 2025

Question 17

The velocity of an object at time t seconds is given by $\dot{\underset{\sim}{r}}(t) = e^{t-1}\underset{\sim}{i} + e^{1-t}\underset{\sim}{j},\ t \geq 0.$

The velocity and acceleration of the object are perpendicular at

A. $t = 0$

B. $t = 1$

C. $t = e$

D. $t = \log_e\left(e^2 + 1\right)$

Question 18

The following algorithm determines the vector projection of vector $\underset{\sim}{a}$ in the direction of vector $\underset{\sim}{b}$.

Inputs:

$\underset{\sim}{a} \leftarrow (a_1, a_2, a_3)$

$\underset{\sim}{b} \leftarrow (b_1, b_2, b_3)$

Define vectorProjection $(\underset{\sim}{a}, \underset{\sim}{b})$

$$x \leftarrow m \times \frac{b_1}{(b_1)^2 + (b_2)^2 + (b_3)^2}$$

$$y \leftarrow m \times \frac{b_2}{(b_1)^2 + (b_2)^2 + (b_3)^2}$$

$$z \leftarrow m \times \frac{b_3}{(b_1)^2 + (b_2)^2 + (b_3)^2}$$

$result \leftarrow (x, y, z)$

return $result$

Which of the following expressions correspond to the value of m?

A. $a_1 \times b_1 + a_2 \times b_2 + a_3 \times b_3$

B. $a_1 \times (b_1)^2 + a_2 \times (b_2)^2 + a_3 \times (b_3)^2$

C. $(a_1)^2 \times b_1 + (a_2)^2 \times b_2 + (a_3)^2 \times b_3$

D. $\sqrt{a_1 \times b_1} + \sqrt{a_2 \times b_2} + \sqrt{a_3 \times b_3}$

© The Mathematical Association of Victoria, 2025

Question 19
A random sample of n persons was asked at which age they got married in a certain town. Based on their responses, a 95% confidence interval of the age of marriage is calculated as $(28.5, 33.5)$ years. Assume that the standard deviation of the age of marriage for the population in this town is 12 years.
The value of n, to the nearest whole number, is

A. 22

B. 62

C. 89

D. 125

Question 20
According to the Bureau of Statistics, the average salary of fresh graduate engineers is $70,000 with a standard deviation of $12000. An engineering firm claims that they pay more to their graduate engineers. To test this claim, a group of 20 randomly selected graduate engineers from the company are surveyed, and their average salary is found to be $72, 500.

Which of the following best describes the Type-II error for this test?

A. The company pays more salary, but the test concludes that the company does not.

B. The company pays more salary, and the test also concludes that.

C. The company does not pay more salary, but test concludes that the company pays more.

D. The company does not pay more salary, and the test also concludes that.

© The Mathematical Association of Victoria, 2025

This page is blank.

Examination continues on the next page.

© The Mathematical Association of Victoria, 2025

Section B

Instructions

- Answer **all** questions in the spaces provided.
- Write your responses in English.
- Unless otherwise specified, an **exact** answer is required to a question.
- In questions where more than one mark is available, appropriate working **must** be shown.
- Unless otherwise indicated, the diagrams in this book are **not** drawn to scale.
- Take the **acceleration due to gravity** to have magnitude $g\ \mathrm{m\ s^{-2}}$, where $g = 9.8$

Question 1 (10 marks)

Consider the function f with rule $f(x) = -3\operatorname{arcos}(2x-3)+1$

a. Sketch the graph of $y = f(x)$ on the set of axes below. Clearly label any point(s) of inflection and endpoints with coordinates. 3 marks

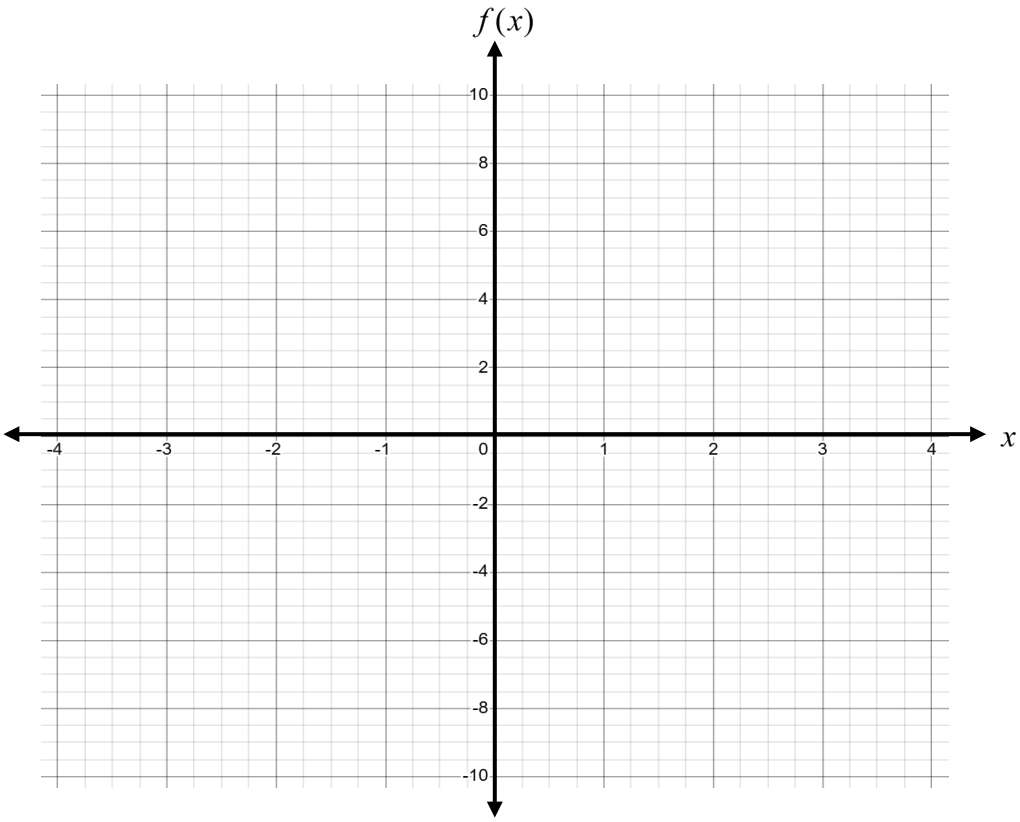

b. The graph of f is rotated around the $x-$axis.

i. Write down the integral statement that will find the volume produced. 1 mark

_____

_____

© The Mathematical Association of Victoria, 2025

ii. Hence evaluate the volume when the graph of f is rotated around the $x-$axis. Give your answer correct to 2 decimal places. 1 mark

Consider the family of functions g with rule $g(x) = a\arccos(bx+c)+d$ where $a,b,c,d \in R$ and $a > 0, b \neq 0$

c. **i.** Write down, in terms of the given parameters, the coordinates any points of inflection on the graph of g. 2 marks

ii. Show that there are no stationary points on the graph of g. 1 mark

Consider the function h with rule $h(x) = \frac{6}{\pi}\arcsin(3x-2) - \frac{1}{2}$

Now consider graphs of the functions $y = |h(x)|$ and $y = h(|x|)$

d. State the $x-$values where the graphs of $y = |h(x)|$ and $y = h(|x|)$ intersect? 1 mark

e. Consider again the curves $y = |h(x)|$ and $y = h(|x|)$. State the domain and range of the graph of $y = |h(x)| + h(|x|)$. 1 mark

© The Mathematical Association of Victoria, 2025

Question 2 (9 marks)

Consider the complex numbers $z_1 = \frac{\sqrt{6}-\sqrt{2}}{4} + \frac{\sqrt{6}+\sqrt{2}}{4}i$ and $z_2 = \frac{\sqrt{6}+\sqrt{2}}{4} + \frac{\sqrt{6}-\sqrt{2}}{4}i$ where $z \in C$

a. **i.** Express z_1 and z_2 in polar form. 1 mark

ii Hence, state $z_1 z_2$ and $\frac{z_1}{z_2}$ in polar form. 2 marks

Let $u = 2\text{cis}\left(\frac{\pi}{2}\right)$ and $v = 2\text{cis}\left(-\frac{2\pi}{3}\right)$.

b. Express $\left\{z : z - u = k(v-u), z \in C \text{ and } k \in R\right\}$ in the form $y = ax + b$, where a, b, k are real constants and x, y variables. 2 marks

© The Mathematical Association of Victoria, 2025

c. State the angle that the line $\{z : z - u = k(v - u), z \in C \text{ and } k \in R\}$ forms with the positive direction of the $x-$ axis. 1 mark

d. The line found in **part c**, forms a segment with the circle centred at the origin with radius 2.

i. Sketch both the line and the circle on the grid below, identifying points of intersection between the line and the circle.

2 marks

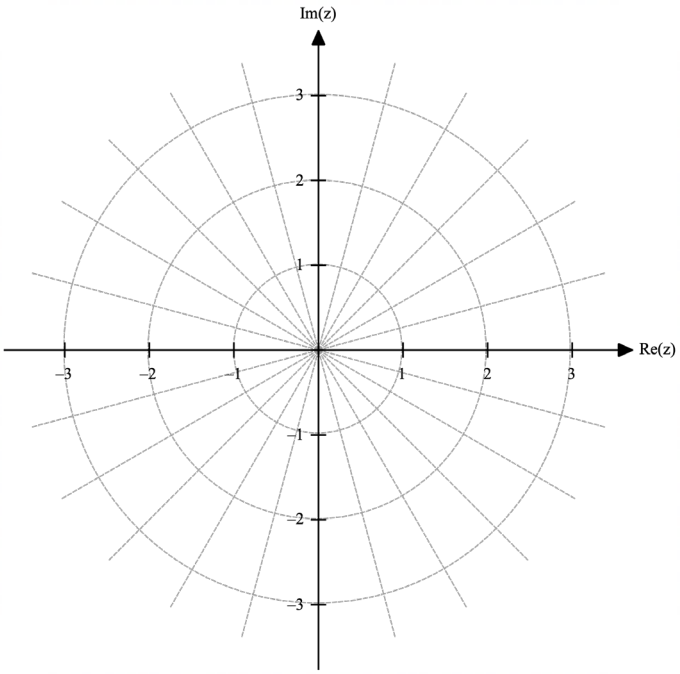

ii. Find the area of the minor segment formed by the line and the circle. 1 mark

© The Mathematical Association of Victoria, 2025

Question 3 (12 marks)

The temperature inside an indoor auditorium is modelled by the differential equation

$$\frac{dT}{dt} = kT\left(1 - \frac{T}{40}\right)$$

where k is a constant of proportionality and $k \in R^+$. T is the temperature inside the auditorium in ${}^0C$ at t minutes, $t \geq 0$.

The organiser observes that the initial temperature of the auditorium is 25^0C at the opening of the gate to the auditorium. The temperature inside the auditorium gradually increases as the audience enters the venue. It is found that the temperature inside the auditorium is 30^0C after 5 minutes of opening the gate.

a. Show that the solution to the differential equation, $\frac{dT}{dt} = kT\left(1 - \frac{T}{40}\right)$ can be expressed in the form $T = \frac{40Ae^{kt}}{1 + Ae^{kt}}$, where A and k are real constants. 3 marks

© The Mathematical Association of Victoria, 2025

b. Find $\lim_{t \to \infty} T = \dfrac{40Ae^{kt}}{1 + Ae^{kt}}$ 1 mark

c. State the meaning of your answer to **part b**. in the context of the model. 1 mark

d. Using the given conditions, determine the values of A and k . 2 marks

e. On the set of axes below, sketch the graph, from **part d**, of $y = T(t)$ for $t \in [0, 30]$, labelling the asymptote and coordinates of endpoints, correct to 1 decimal place when required. 2 marks

© The Mathematical Association of Victoria, 2025

The temperature inside the auditorium is also modelled as a function of the number of audience members entering the venue at a certain time after opening. The temperature inside the auditorium T (in ^0C) when there are n audience members inside the venue is given by

$$T = 25 + n^{\frac{3}{7}}, \text{ where } 0 \le n \le 550.$$

Assume that the maximum seating capacity inside the auditorium is 550.

f. Determine the rate of change of the audience members inside the auditorium (in persons per minute), correct to the nearest whole number, when the temperature inside the auditorium is 36ºC. 3 marks

© The Mathematical Association of Victoria, 2025

Question 4 (10 marks)

The vector equation of the plane Π_1 is given by

$$\underset{\sim}{r}(s,t) = (1-2s+t)\underset{\sim}{i} + (3s-2t)\underset{\sim}{j} + (3+s-t)\underset{\sim}{k}, \text{ where } s,t \in R.$$

a. Show that the Cartesian equation of the plane Π_1 is $x+y-z=-2$.

2 marks

A second plane Π_2 is parallel to the plane Π_1 and passes through the point $(2,3,1)$.

b. Determine the Cartesian equation of plane Π_2. 1 mark

c. Calculate the shortest distance between the planes Π_1 and Π_2. 2 marks

The vector equation of the line L is given by $\underset{\sim}{l}(u) = 2\underset{\sim}{i} + \underset{\sim}{j} - \underset{\sim}{k} + u(3\underset{\sim}{i} - 2\underset{\sim}{j} - \underset{\sim}{k})$, where $u \in R$. The line L intersects the planes Π_1 and Π_2 at points P and Q, respectively.

d. Determine the coordinates of points P and Q. 2 marks

© The Mathematical Association of Victoria, 2025

e. Determine the acute angle made by the line L with the plane Π_1. Give your answer correct to the nearest degree. 1 mark

The line L lies on a third plane Π_3. The plane Π_3 also passes through the point $(-5,3,4)$.

f. Determine the Cartesian equation of plane Π_3. 2 marks

© The Mathematical Association of Victoria, 2025

Question 5 (9 marks)

The figure below shows a vertical circular Ferris wheel. The coordinates of point A is $(70,0,0)$ in a 3-D perpective and the centre of the Ferris wheel is located vertically above point A.

Assume that the x-y plane represents the ground and the Ferris wheel rotates at the x-z plane.

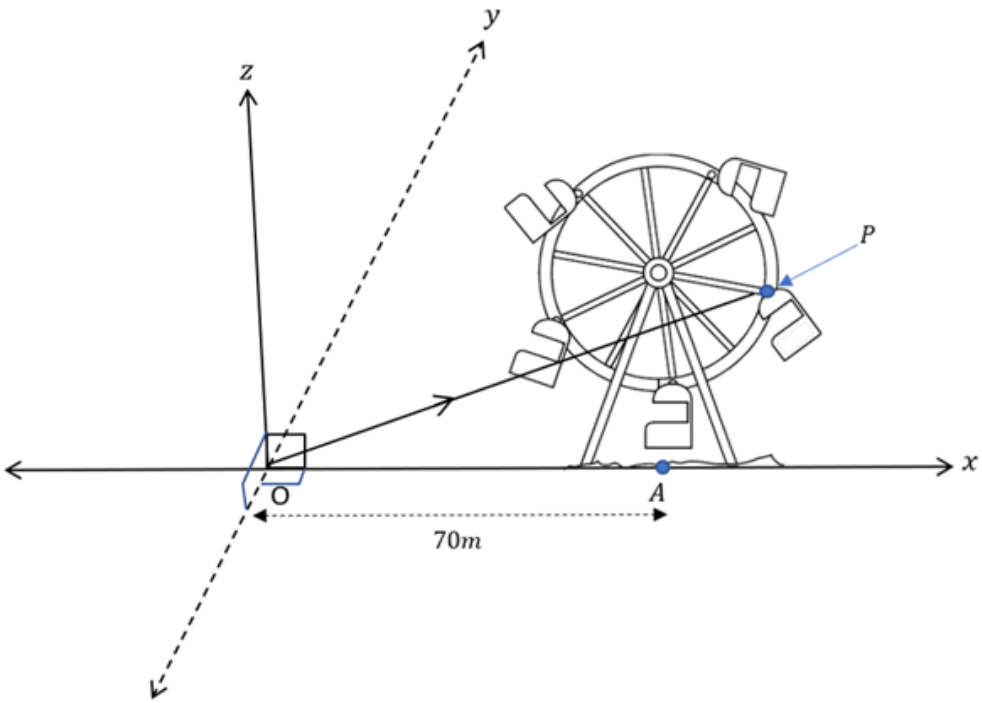

The position vector of the point P (as marked on the figure above) from the origin after t seconds from the start of rotation of the Ferris wheel is given as

$$\underset{\sim}{r}(t)=\left(4\cos\left(\frac{\pi t}{30}\right)+70\right)\underset{\sim}{i}+\left(4\sin\left(\frac{\pi t}{30}\right)+6\right)\underset{\sim}{k},\text{ where } t\geq 0.$$

Assume that all distances are measured in metres (m) and time in seconds (s).

a. What is the maximum heights of the point P from the ground as the Ferris wheel rotates? 1 mark

b. The times at which the point P reaches at the maximum height from the ground can be expressed as $t=an+b$, where $n\in Z^{+}\cup\{0\}$ and $a,b\in R$. Find the values of a and b. 1 mark

© The Mathematical Association of Victoria, 2025

c. Show that, the speed of the point P is $\frac{2\pi}{15}$ m/s as the Ferris wheel rotates. 2 marks

Let, $f(t)$ be the function that represent the **square** of the distance of point P from the origin, that is $f(t) = \left|\vec{OP}\right|^2$.

d. The times at which the value of function $f(t)$ becomes either minimum or maximum can be expressed as $t = \frac{c}{\pi}\tan^{-1}\left(\frac{d}{c+5}\right) + c \times n$, where $n \in Z^+ \cup \{0\}$ and $c, d \in R^+$. Find the values of c and d.

3 marks

e. Hence, determine the lowest and the highest distances of the point P from the origin. Express your answers correct to 1 decimal place. 2 marks

© The Mathematical Association of Victoria, 2025

© The Mathematical Association of Victoria, 2025

Question 6 (10 marks)

The owner of a poultry farm studied the weight of eggs over a period and concludes that the weight of eggs are normally distributed with mean 60 grams and standard deviation 6 grams.

Eggs are packed in a cardboard box to be delivered to a supermarket, where each box contains 12 eggs. Assume that the weights of empty cardboard boxes are also normally distributed with mean 80 grams and standard deviation 13.9 grams.

Let B be the random variable representing the total weight of a cardboard box containing 12 eggs.

a. Determine the mean and standard deviation of a box of 12 eggs. Give your answers to the nerest whole numbers. Hence, find the probability, correct to four decimal places, that a randomly selected box of eggs would be heavier than 840 grams. 2 marks

A batch of 10 boxes are checked one after another.

b. What is the probability that more than 2 out of these 10 boxes would be heavier than 840 grams. Give your answer correct to three decimal places. 1 mark

100 cardboard boxes containing eggs are wrapped in plastic to safely transport the eggs to a supermarket. Assume that the weight of the plastic is negligible. The sample mean weight of a cardboard box containing eggs, for these 100 cardboard boxes, is found to be 810 grams.

Assume that the standard deviation of 100 boxes is the same as in **part a.**

c. One such plastic container is opened and a box of egg is selected randomly. Determine the 95% confidence interval for the weight of the egg box. Give your answer correct to one decimal place. 1 mark

© The Mathematical Association of Victoria, 2025

On another occasion, m cardboard boxes of eggs are wrapped in plastic in order to be safely transported to a supermarket. With 95% confidence, it is found that the weight of a randomly selected carboard box containing eggs lies within 3.6 grams of the mean weight of all cardboard boxes containing eggs.

d. Determine the value of m, giving your answer as an integer. 2 marks

The poultry farm recently introduced a new meal for some of its chicken. It is expected that the new meal would increase the mean weight of eggs. To verify whether the new meal indeed increased the egg weight, the poultry farm conducted a statistical analysis with **1% significance level**. The farm randomly sampled 64 eggs from the chickens that are fed with new meal and found that the mean weight of eggs is 62 grams. The population standard deviation for weight of eggs is 6 grams.

e. Write a null and alternative hypothesis for this test. 1 mark

f. Calculate p-value, correct to 4 decimal places, and hence conclude whether the new meal increased egg weight or not. 2 marks

The poultry farm continued their investigation with the new meals and over time they found that the true mean weight of eggs with new meal is 62.5 grams. The population standard deviation for weight of eggs is 6 grams.

g. Determine the probability of Type II error during the hypothesis testing which has been conducted above based on a sample of 64 eggs with mean egg weight of 62 grams with 1% significance level. Give your answer correct to three decimal places. 1 mark

© The Mathematical Association of Victoria, 2025

End of Question and Answer Book

© The Mathematical Association of Victoria, 2025